pesc 08 Rhodes - Greece

IEEE 39th Power Electronics Specialists Conference
June 15-19, 2008

Improvement of the Shunt Active Power Filter Dynamic Performance

Krzysztof Piotr Sozański

UNIVERSITY of ZIELONA GÓRA, Institute of Electrical Engineering
ul. Podgórna 50, 65-246 Zielona Góra, Tel.: +48/68 – 3282567, Fax: +48/68 – 3254615
E-Mail: K.Sozanski@iee.uz.zgora.pl, URL: http://hook.uz.zgora.pl/~ksozansk/

Harmonic compensation circuit with current-fed active power filter without feedback (with unity gain)

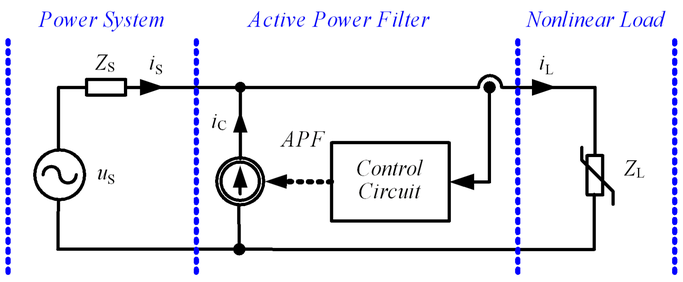

The shunt active power filter injects AC power current i_C to cancel the main AC harmonic content. The line current i_S is the result of summing the load current i_L and the compensating current i_C

$$i_S = i_L + i_C$$

Tests circuit of classical three-phase shunt active power filter

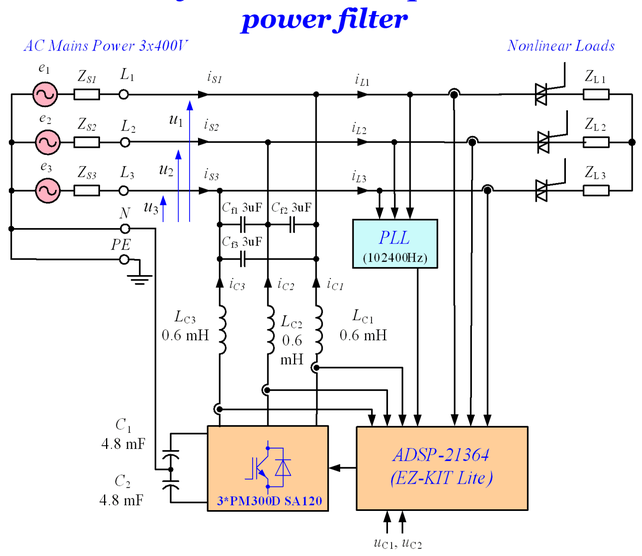

Eexperimental waveforms of classical active power filter in steady-state with the resistive load

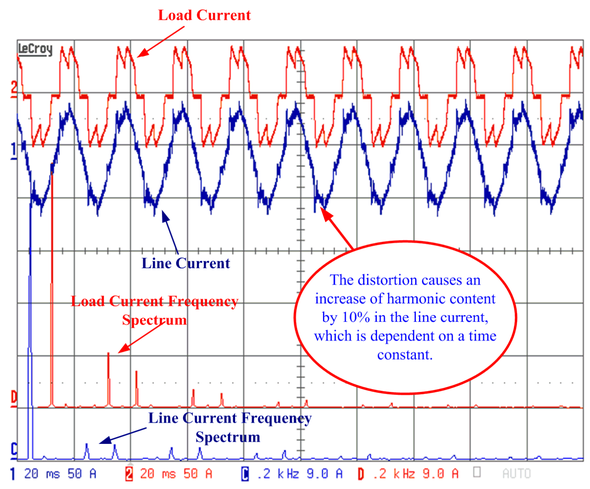

Discussion about possible solutions

For predictable loads

1. Typical APF with non-causal control algorithm
2. Typical APF with repetitive control algorithm

For unpredictable loads

1. High speed APF
2. Set of two APFs:
   - high power low speed APF,
   - low power high speed APF.
3. APF with modified output inverter

Diagrams of APF output inverter connected to the mains power

Simplified circuit

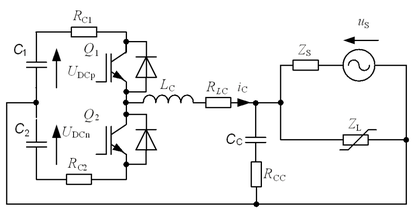

Simplified inverter model connected to the mains power, used for current ripple calculation

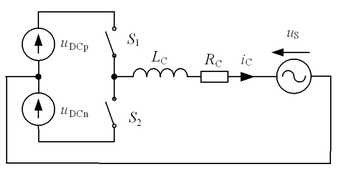

Single-phase active power filter with modified inverter

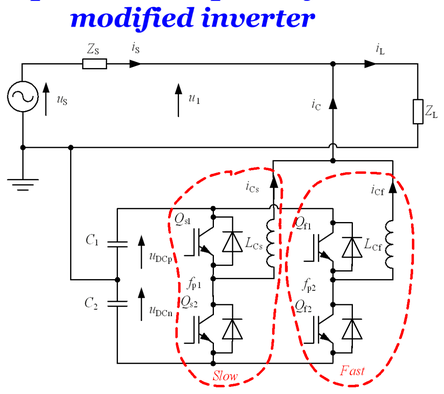

The APF output inverter current ripple calculation

The circuit resultant resistance R_C mainly depends of the resistance of inductor L_1,

$$R_C \cong R_{LC}$$

For switching state S_1=1, S_2=0 compensating current i_C can be calculated by formula

$$i_C(t) = \frac{u_{DCp}(t_0) - u_S(t_0)}{R_c}\left(1 - e^{-\left(\frac{R_c t}{L_C}\right)}\right) + i_C(t_0)e^{-\left(\frac{R_c t}{L_C}\right)}$$

and for state S_1=0, S_2=1 i_C can be calculated by formula

$$i_C(t) = \frac{-u_{DCn}(t_0) - u_S(t_0)}{R_c}\left(1 - e^{-\left(\frac{R_c t}{L_C}\right)}\right) + i_C(t_1)e^{-\left(\frac{R_c t}{L_C}\right)}$$

where:

$$\tau_C = \frac{L_C}{R_C}$$

If it is assumed that

$$f_s >> \frac{1}{\tau_C} \text{ and } f_s >> \frac{1}{T_M}$$

where: T_M – mains period, during the switching period T_s, and voltages u_S, u_{DCp}, u_{DCn} are constant, and that average current i_C is constant too, then the output current can be calculated by simplified equations: for state S_1=1, S_2=0

$$i_C(t_1) = \frac{u_{DCp} - u_S(t_0)}{L_C}t_1 + i_{Cn}$$

and for state S_1=0, S_2=1

$$i_C(t_2) = i_{Cp} + \frac{-u_{DCn} - u_S(t_0)}{L_C}t_2$$

where: t_1–t_0 switch-on time for S_1, t_2-t_1 switch-on time for S_2.
Output ripple can be calculated by the equation

$$\Delta i_C(t) = \left|\frac{u_{DCp} - u_S(t_0)}{L_C}t_1\right| = \left|\frac{-u_{DCn} - u_S(t_0)}{L_C}t_2\right|$$

Time diagram of idealized compensating current i_C

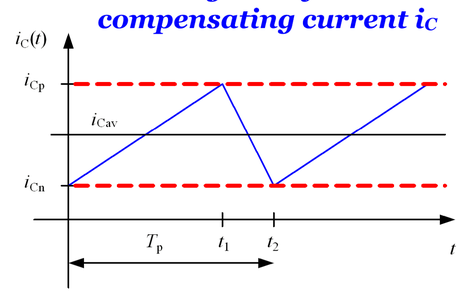

Simplified diagram of modified inverter model connected to the mains power

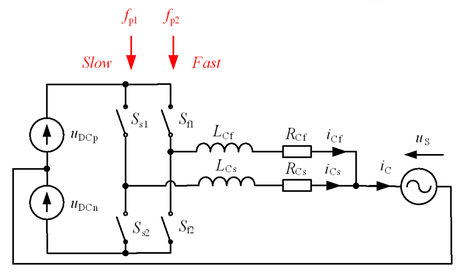

Block diagram of APF control algorithm

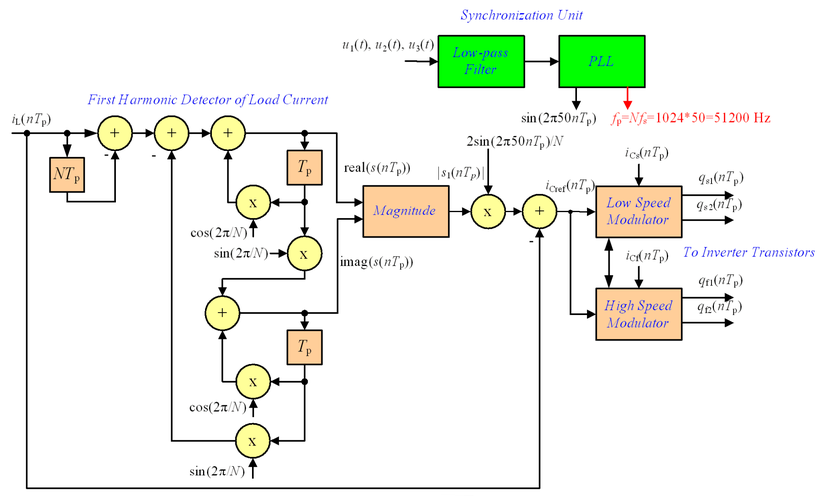

Simplified block diagram of the output inverter simulation circuit

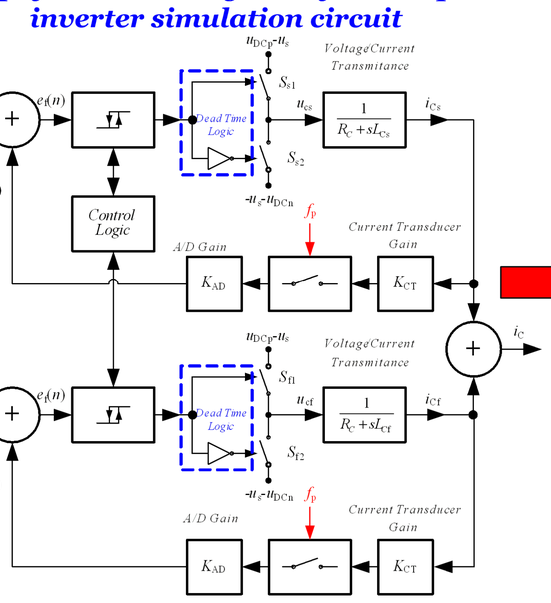

Step responses of two inverters

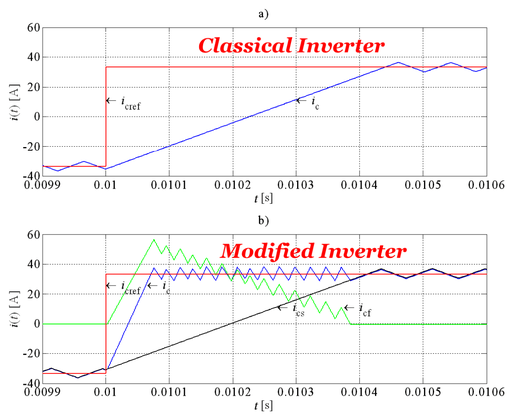

Simulation waveforms of single-phase active power filter with modified output inverter in steady-state with the resistive load

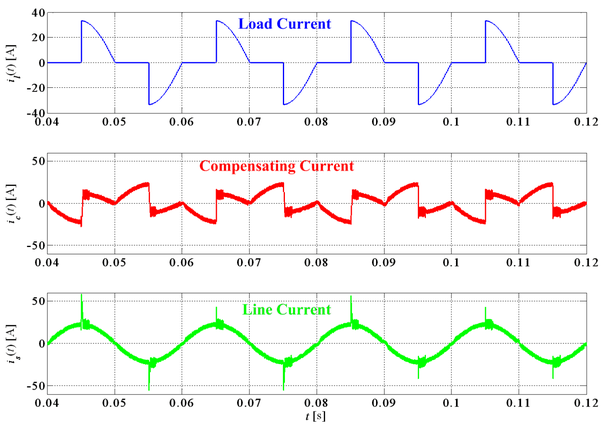

Simulation waveforms of single-phase active power filter with classical output inverter in steady-state with the resistive load

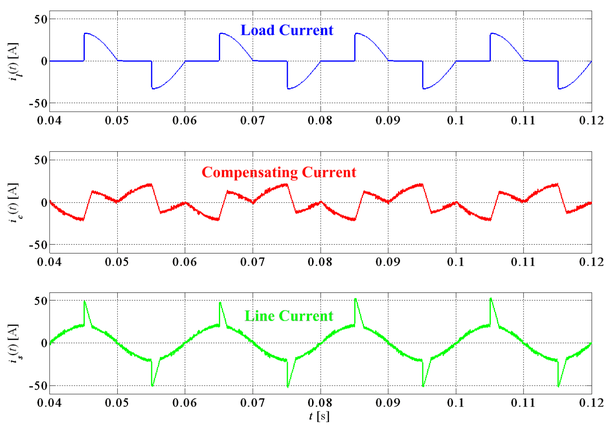

Frequency spectrums of line currents

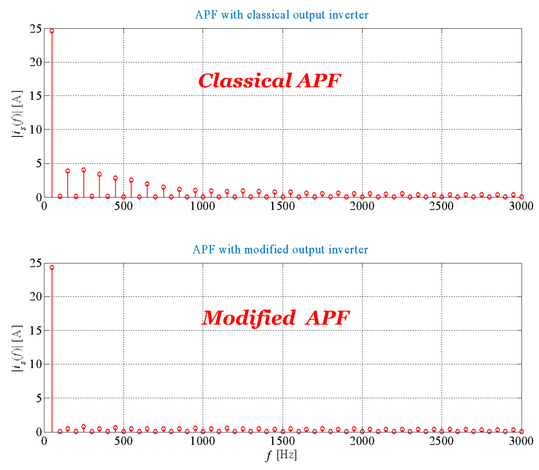

Three-phase APF modified inverter

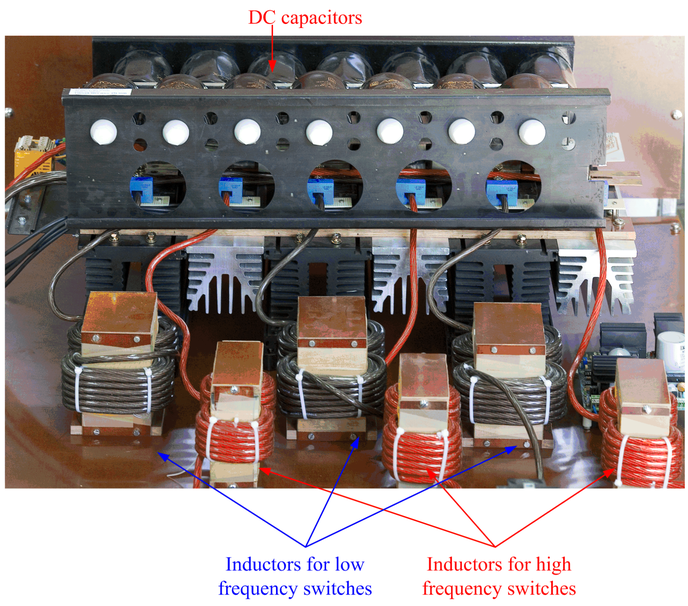

Conclusion

For noise type nonlinear loads (such as in an arc furnace) where the load currents are non periodic and stochastic, the proposed APF with improved dynamic performance is good solution.